HMS Battleship, 1909

BELLEROPHON

БЕЛЛЕРОФОН линейный корабль
Великобритания, 1909

1:700

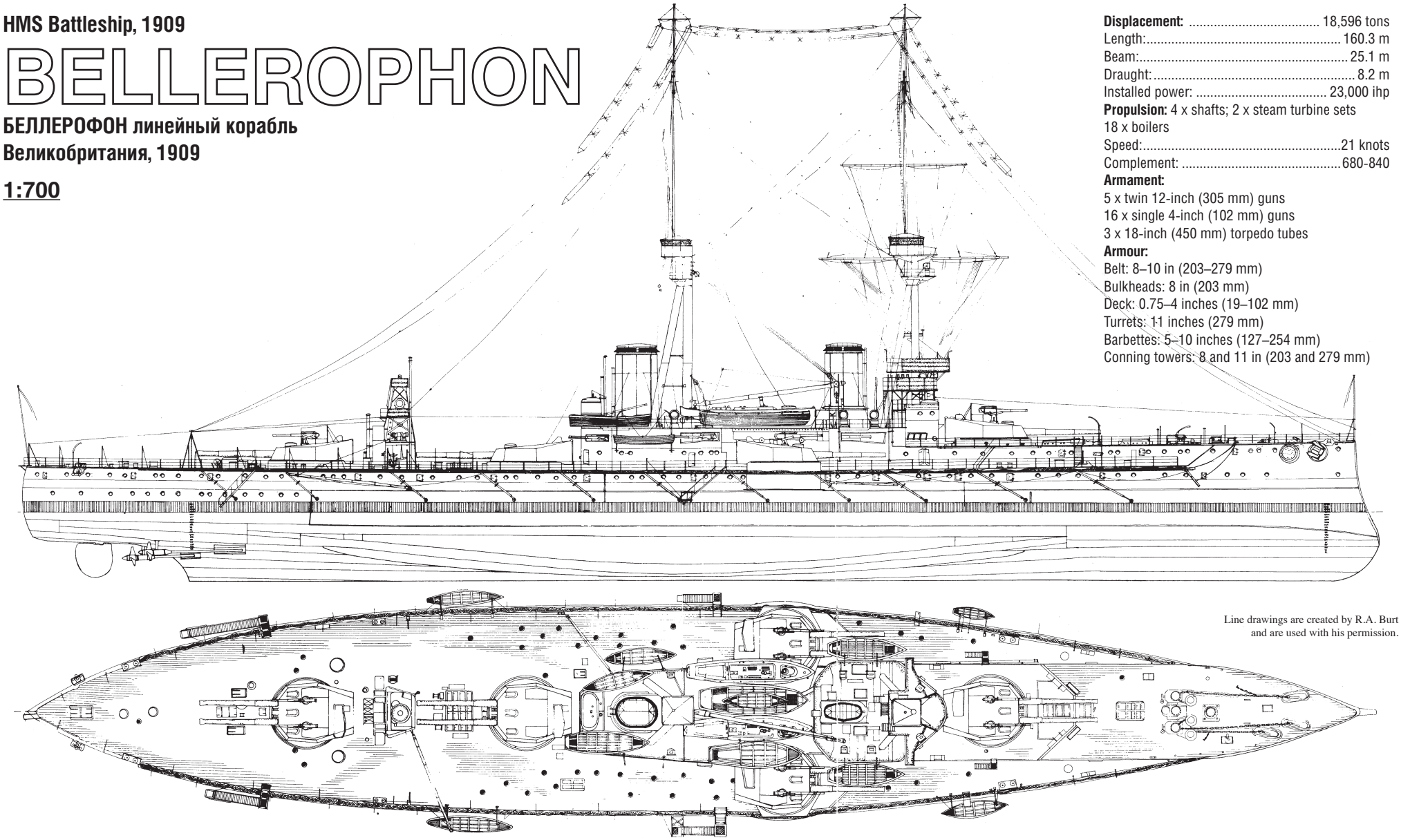

Displacement: ..... 18,596 tons
Length:..... 160.3 m
Beam:..... 25.1 m
Draught:..... 8.2 m
Installed power: ..... 23,000 ihp
Propulsion: 4 x shafts; 2 x steam turbine sets
18 x boilers
Speed:.....21 knots
Complement: 680-840
Armament:
5 x twin 12-inch (305 mm) guns
16 x single 4-inch (102 mm) guns
3 x 18-inch (450 mm) torpedo tubes
Armour:
Belt: 8–10 in (203–279 mm)
Bulkheads: 8 in (203 mm)
Deck: 0.75–4 inches (19–102 mm)
Turrets: 11 inches (279 mm)
Barbettes: 5–10 inches (127–254 mm)
Conning towers: 8 and 11 in (203 and 279 mm)

Line drawings are created by R.A. Burt
and are used with his permission.

HMS Bellerophon was the lead ship of her class of three dreadnought battleships built for the Royal Navy in the first decade of the 20th century. She spent her whole career assigned to the Home and Grand Fleets. Aside from participating in the Battle of Jutland in May 1916 and the inconclusive Action of 19 August, her service during the First World War generally consisted of routine patrols and training in the North Sea. The ship was deemed obsolete after the war and was used as a training ship before she was placed in reserve. Bellerophon was sold for scrap in 1921 and broken up beginning the following year.

СХЕМА СБОРКИ МОДЕЛИ
ASSEMBLY INSTRUCTIONS

1

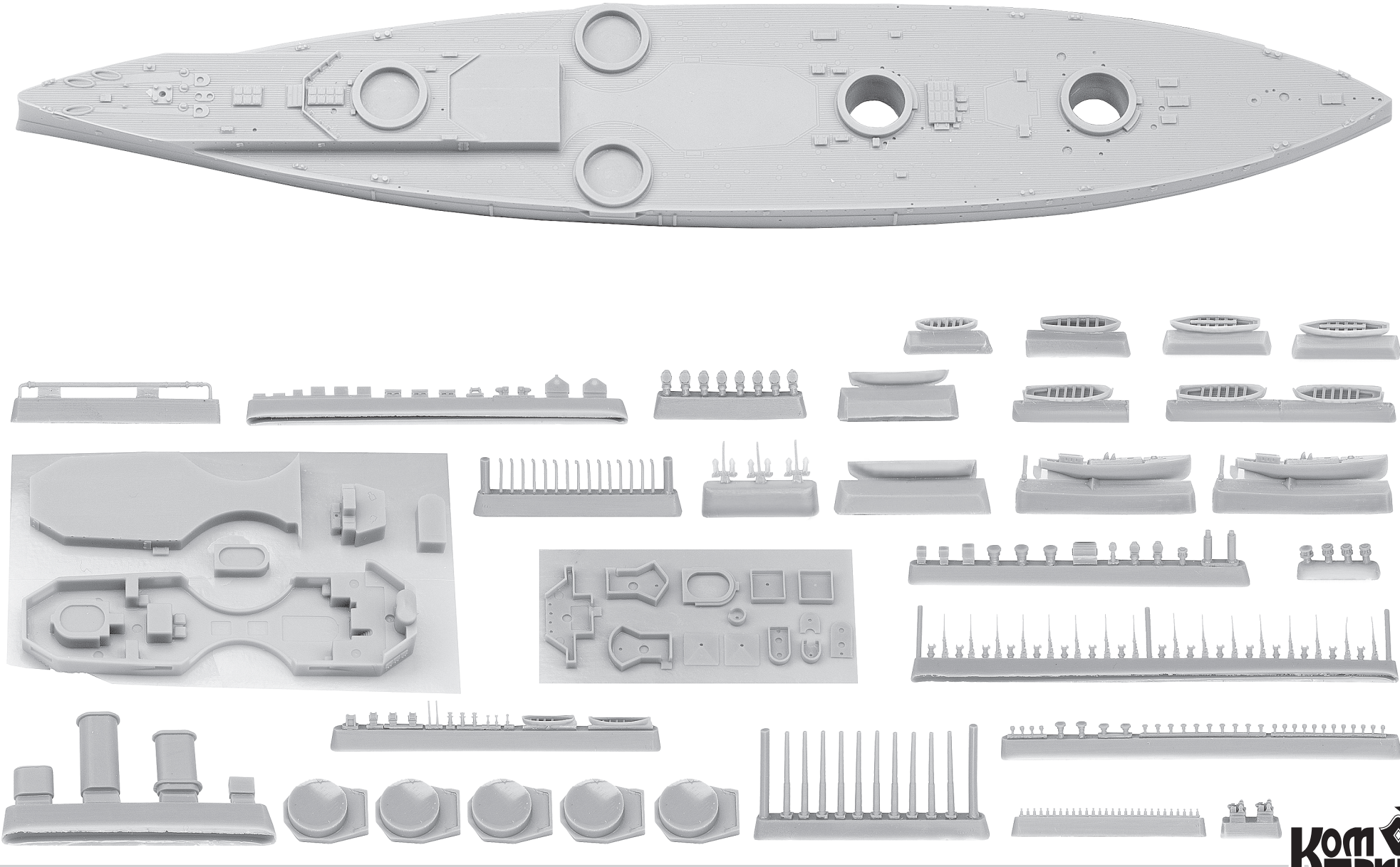

СХЕМА СБОРКИ МОДЕЛИ
ASSEMBLY INSTRUCTIONS

2

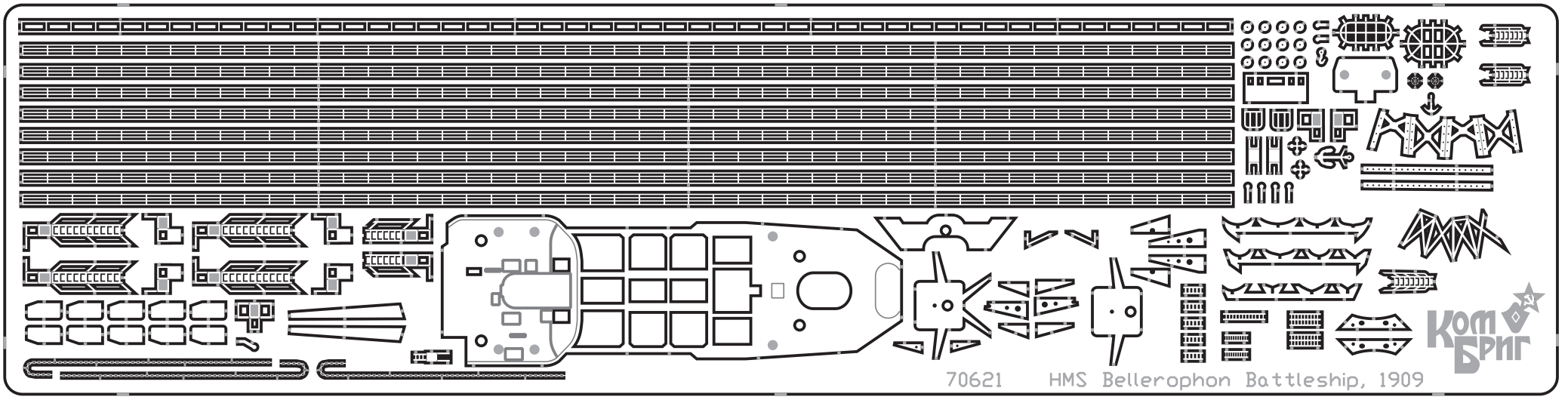

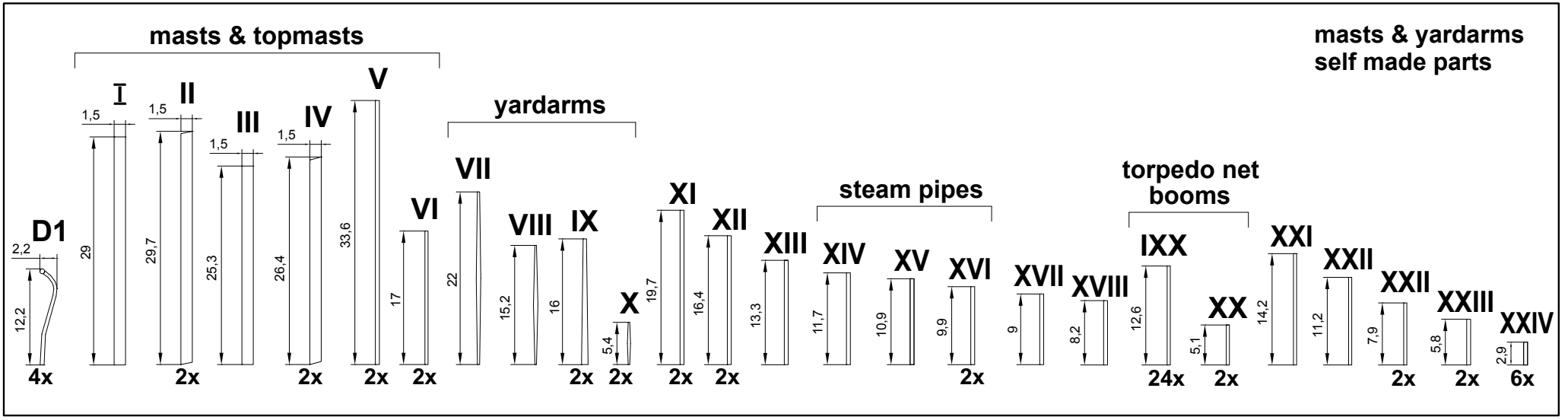

Made in Russia
70621 For more info on Combrig kits see: www.combrig-models.com www.steelnavy.net www.modelwarships.com

СХЕМА СБОРКИ МОДЕЛИ
ASSEMBLY INSTRUCTIONS

3

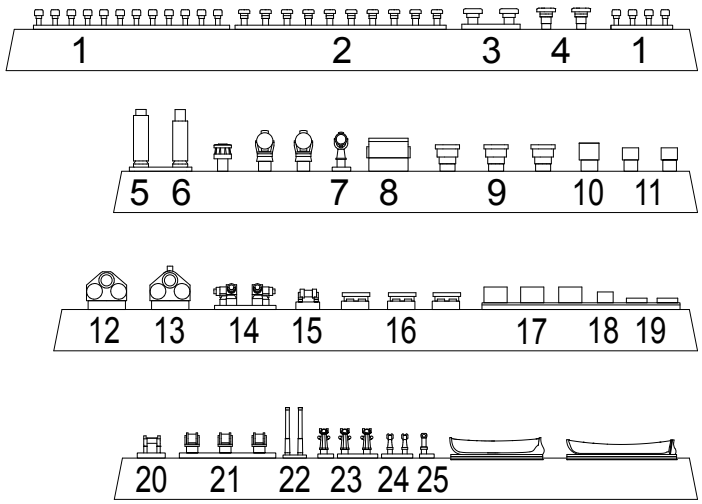

СХЕМА СБОРКИ МОДЕЛИ
ASSEMBLY INSTRUCTIONS

4

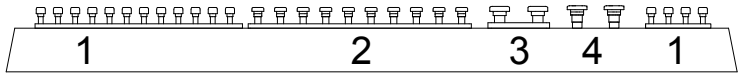



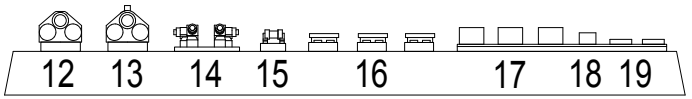

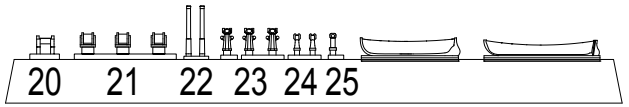

СХЕМА СБОРКИ МОДЕЛИ
ASSEMBLY INSTRUCTIONS
5

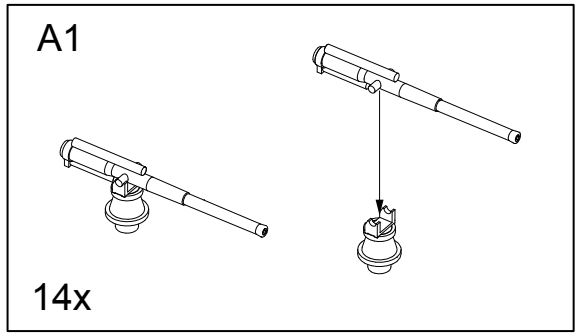

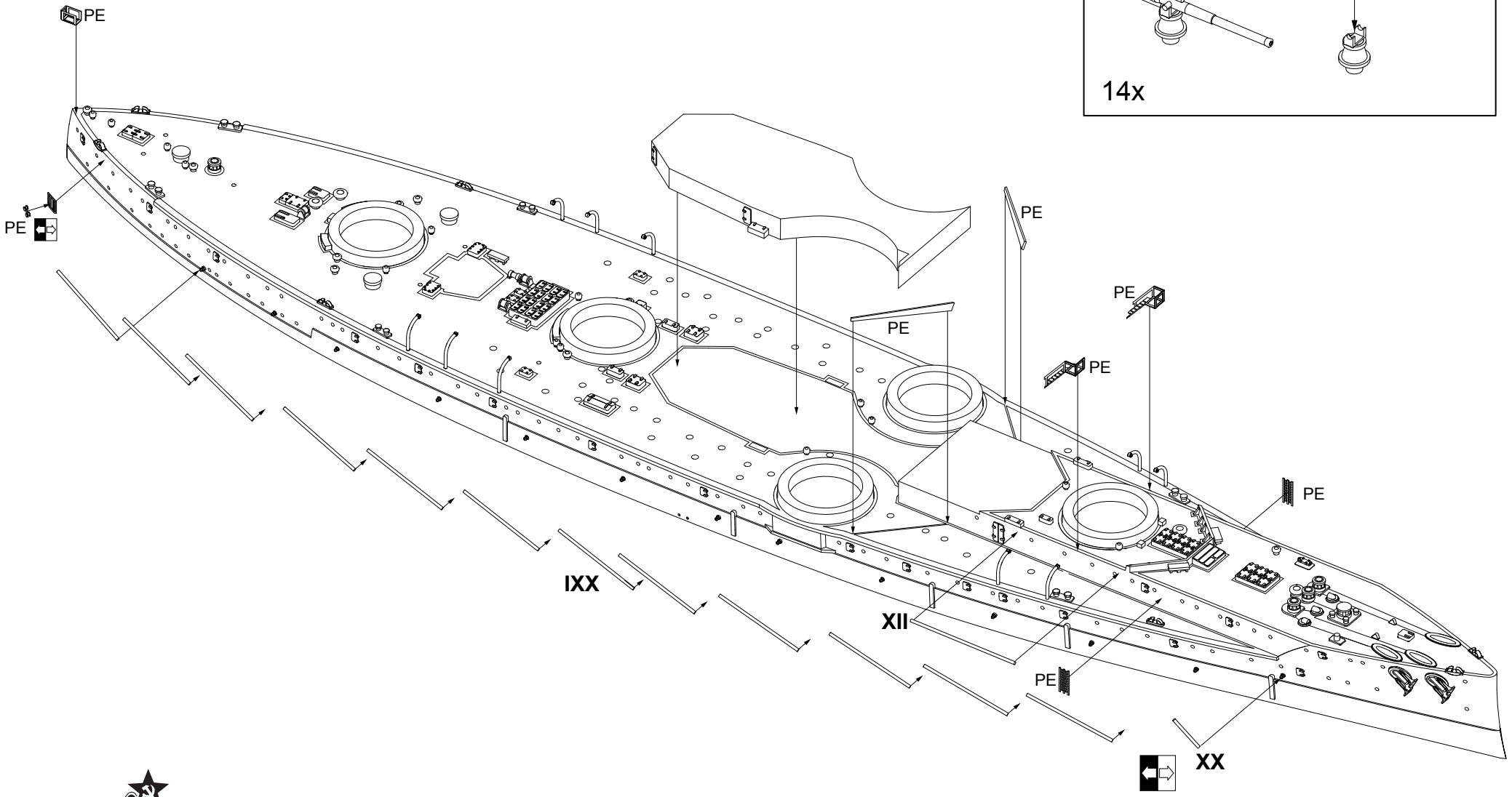

A2

СХЕМА СБОРКИ МОДЕЛИ
ASSEMBLY INSTRUCTIONS

6

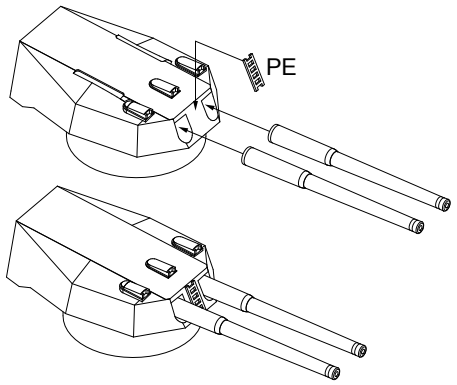

1x

A3

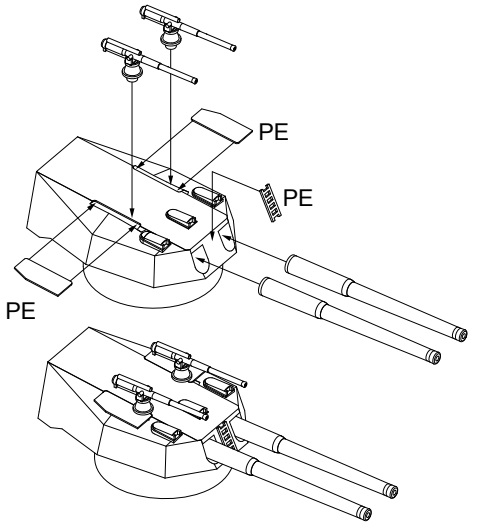

4x

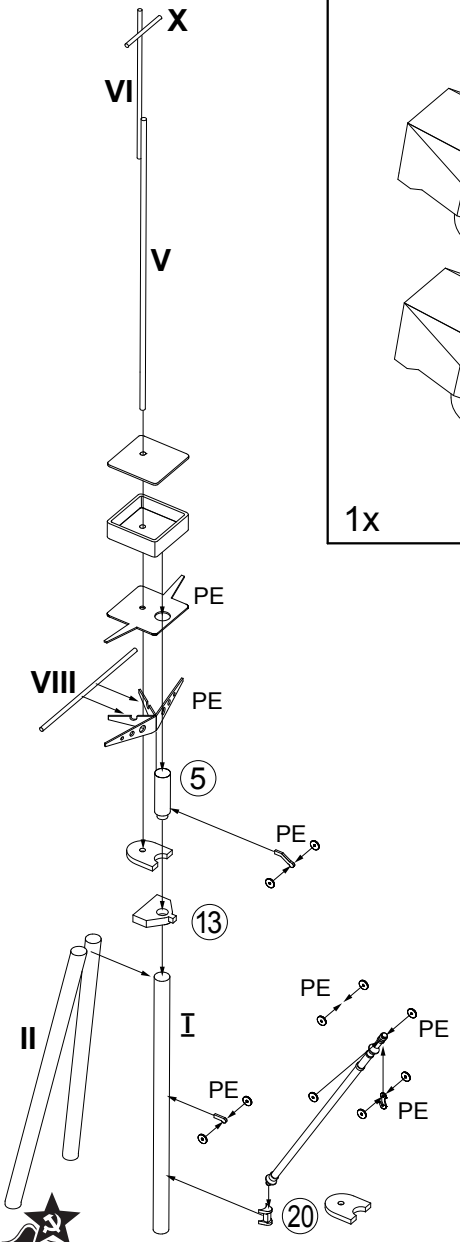

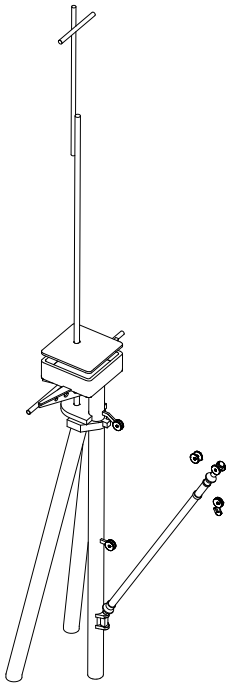

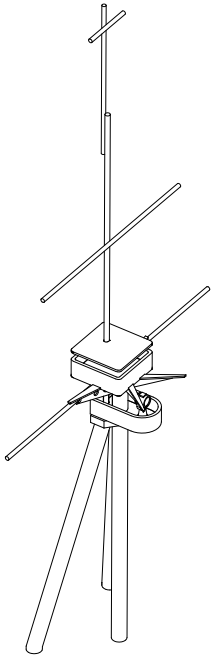

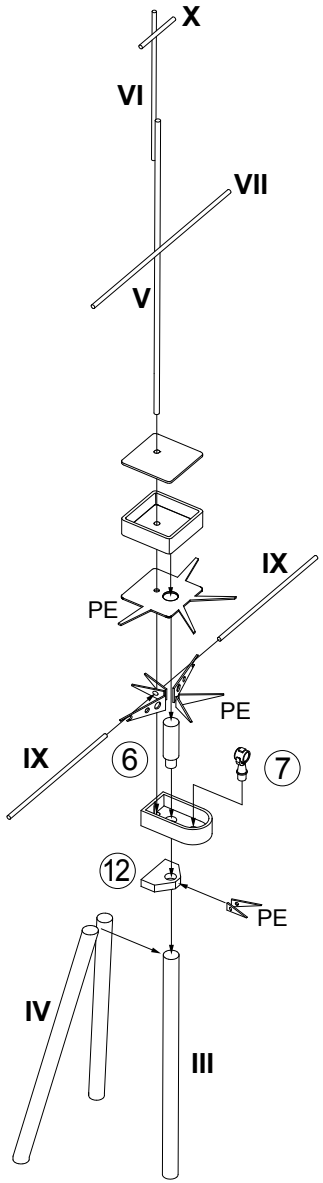

СХЕМА СБОРКИ МОДЕЛИ
ASSEMBLY INSTRUCTIONS

7

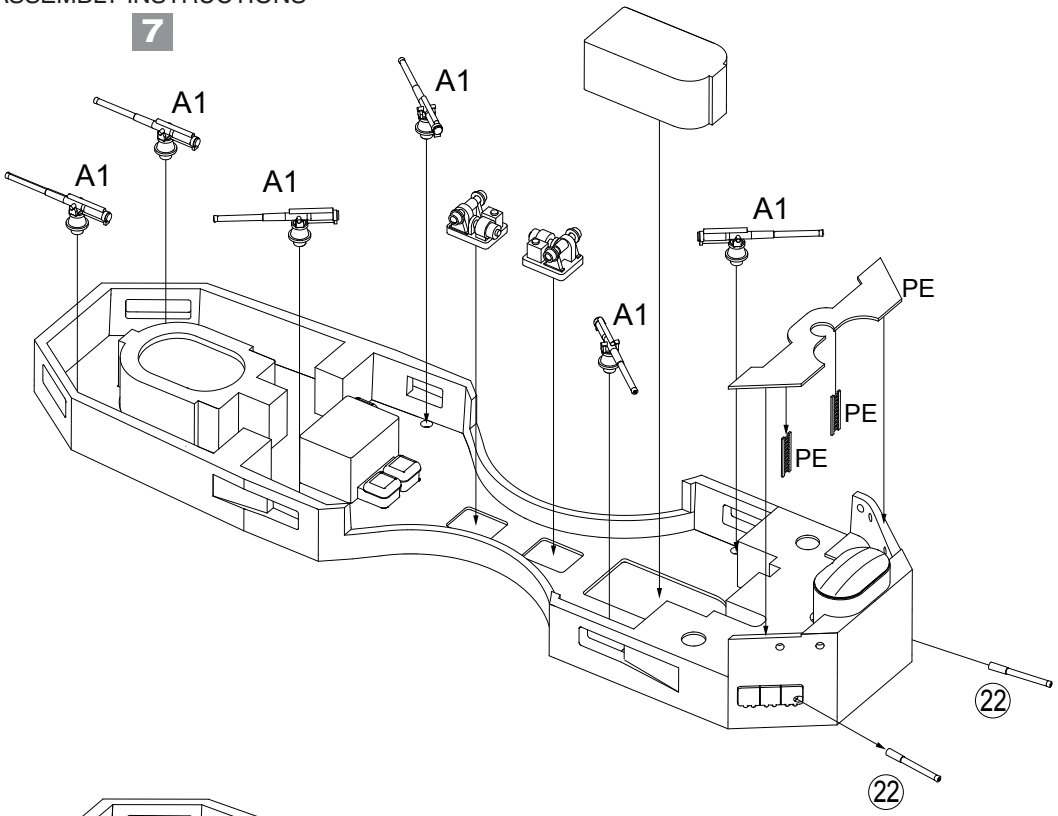

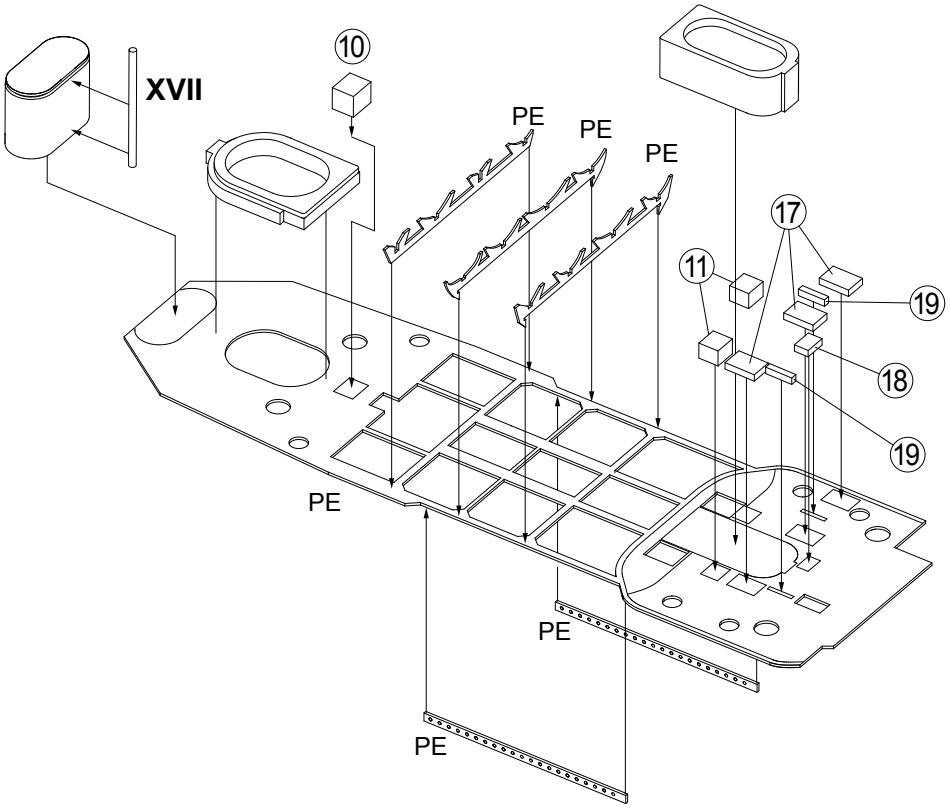

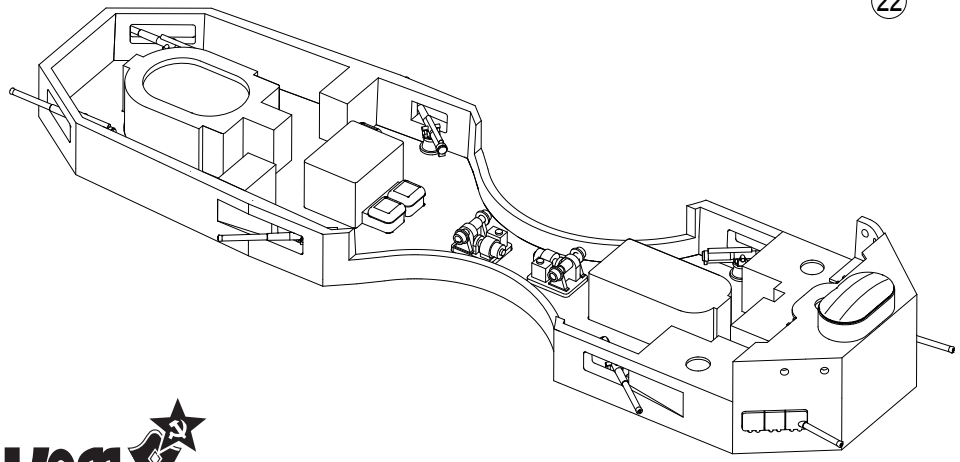

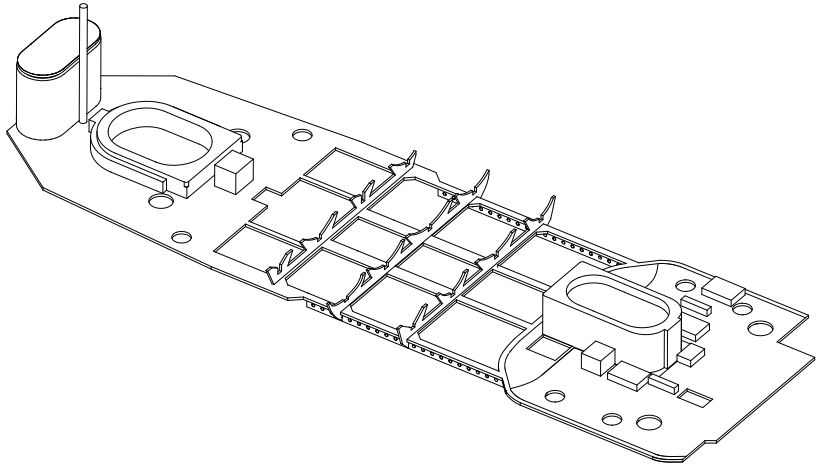

СХЕМА СБОРКИ МОДЕЛИ
ASSEMBLY INSTRUCTIONS

8

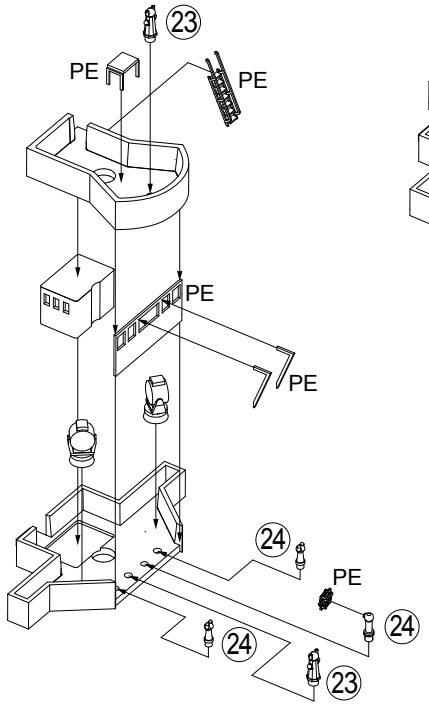

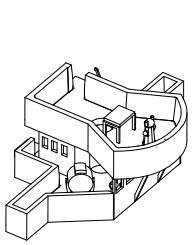

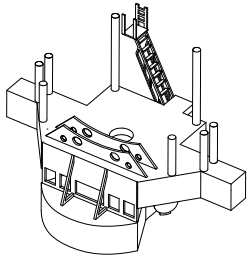

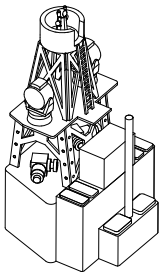

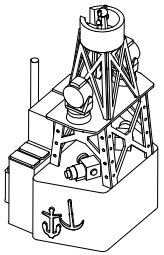

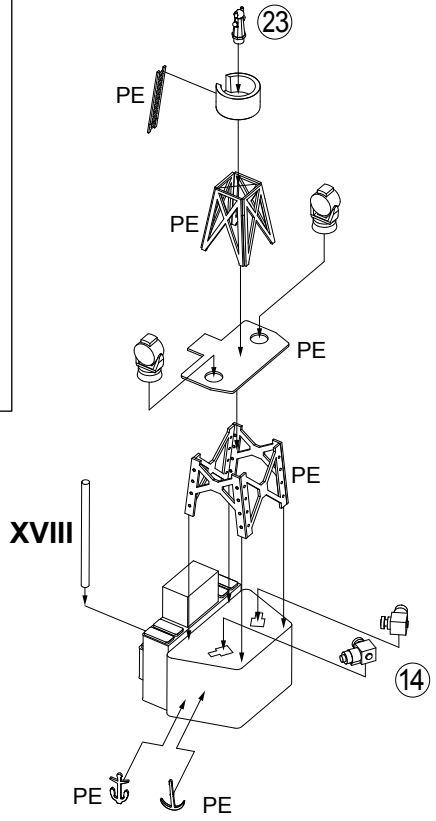

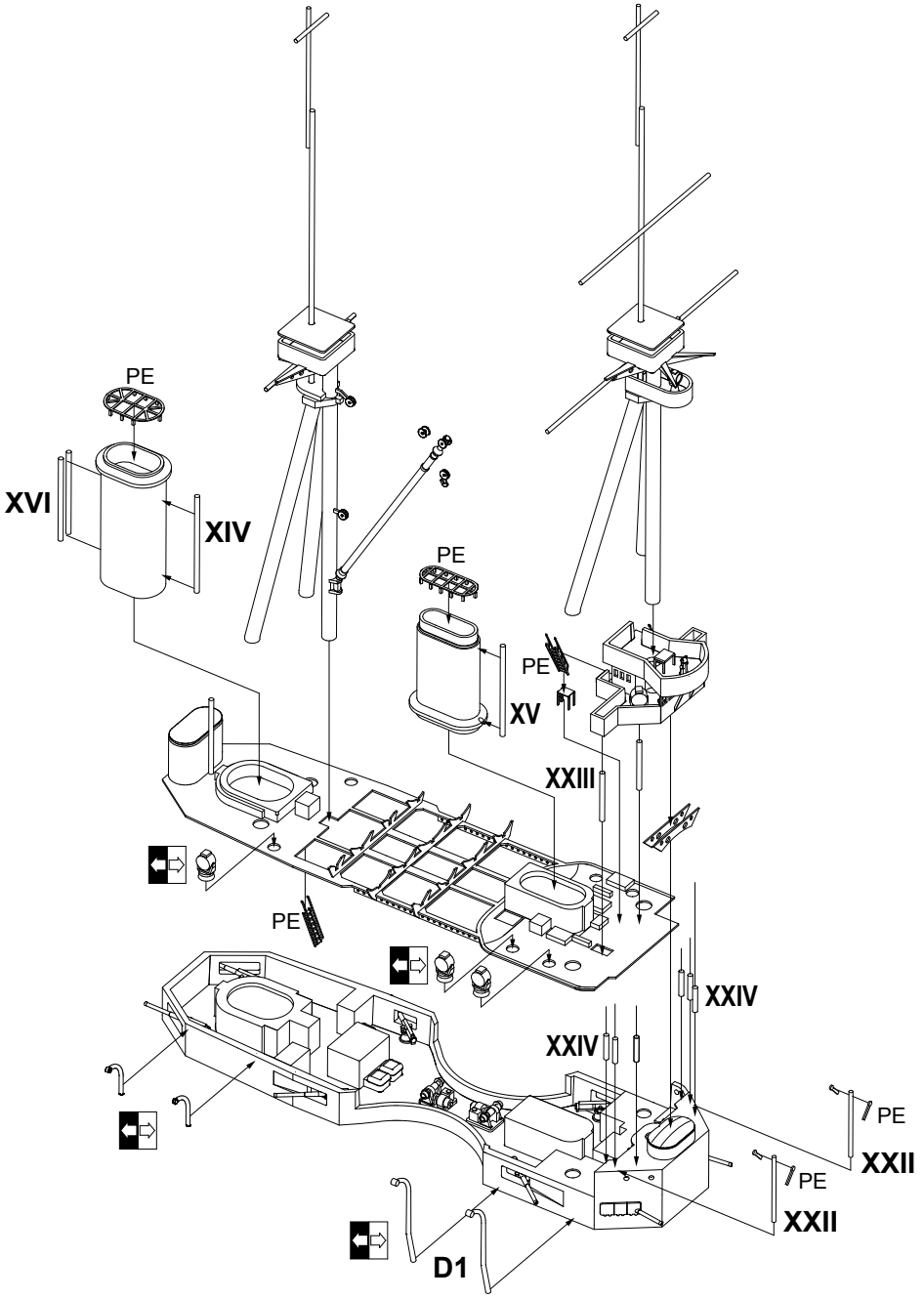

СХЕМА СБОРКИ МОДЕЛИ
ASSEMBLY INSTRUCTIONS

9

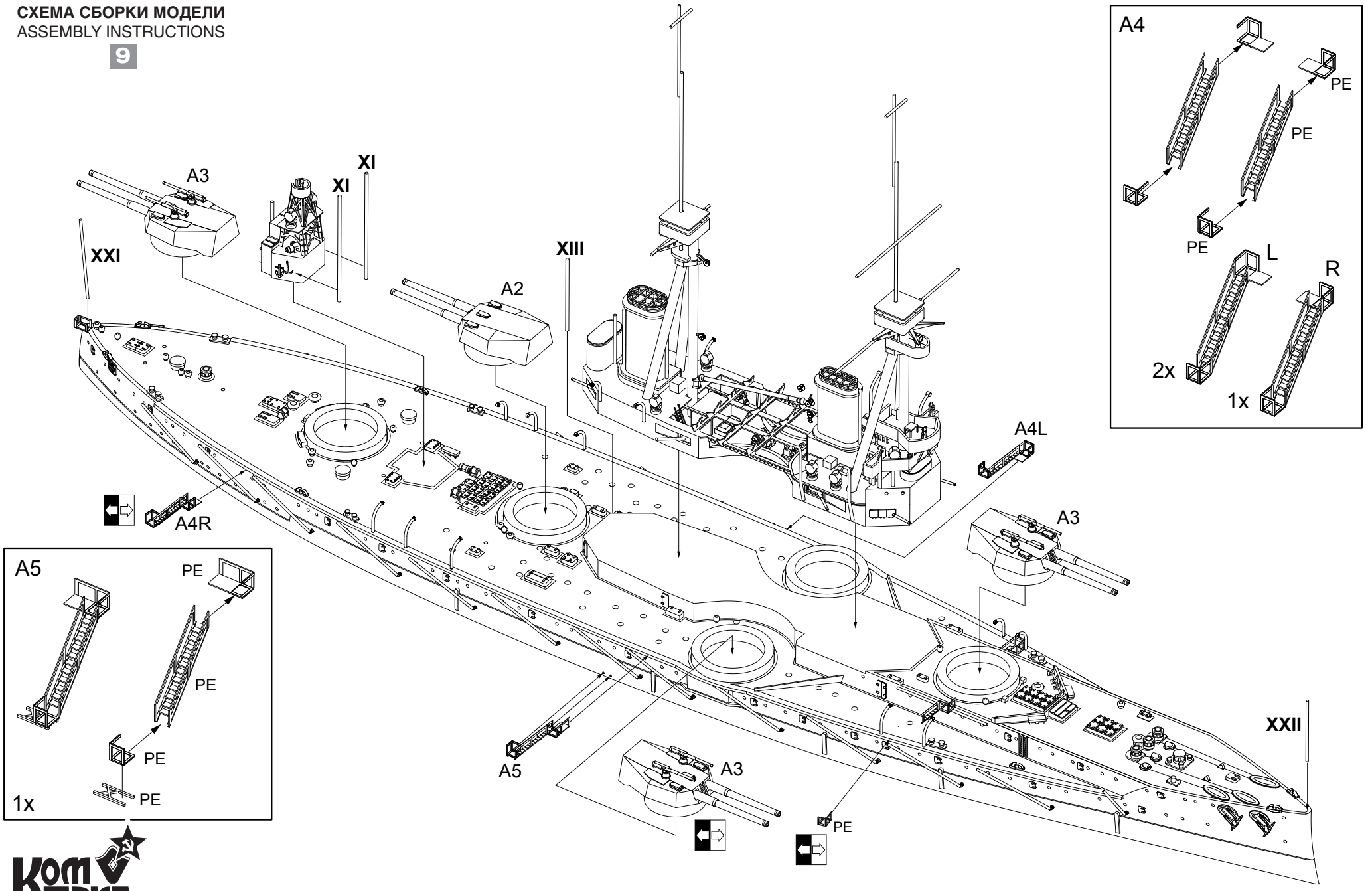

СХЕМА СБОРКИ МОДЕЛИ
ASSEMBLY INSTRUCTIONS

10

